180413-130100100000

7, Autogennaya Str., Kharkov, 61099, Ukraine. Phone: (+38-057) 728-1244, 728-1241. Fax: (+38-057) 728-1243, (+38-0572) 946-830
E-mail: market@yuzhcable.com.ua

# ПвКВнг 3х10-1
# ТУ У 31.3-00214534-016-2003

Power cables with copper conductors, XLPE-insulated, galvanized steel-wire armoured, with low-flammable PVC-compound outer sheath

Cables are used for laying:
- *in bunches*
- *in premises, dry ducts and tunnels, in corrosive environment*
- *in places, where intense tensile forces are possible (in cable lifting, in bulk, heaving, boggy, everfrost soils)*

Manufacturing of cables with a different number and different design of conductors is possible
Manufacturing of single-phase cables with aluminium-wire armour is possible

Fire safety code in accordance with ДСТУ 4809:2007: ПБ130000000
Products of this mark meet the requirements:
- *single wire cable flame retardance*
- *bunched cable flame retardance category B*

## TECHNICAL SPECIFICATIONS

| | | |
|---|---|---|
| Rated voltage | kV | 1 |
| Number and rated area of conductors | $mm^2$ | 3 x 10 |
| Phase insulation thikness | mm | 0.7 |
| Armor wire diameter | mm | 1.4 |
| Permissible continious current rating (AC of industrial frequency) * | | |
| • *by aerial laying* | A | 78 |
| • *by burial* | A | 86 |
| Maximum permissible conductor temperature | | |
| • *Continious* | °C | +90 |
| • *at short circuit* | °C | +250 |
| Operating temperature range | °C | -50 … +50 |
| Minimum bending radius by laying | mm | 126 |
| Rated outer diameter of the cable (for reference) ** | mm | 21 |
| Cable weight (approximate) | kg/km | 960 |
| Rated factory cable length and gross weight of the delivery on the drums *** | m, t | # 14: 1300 • 1.4 |

*Notes:*

*When ordering it is neccesary to agree the factory length of the product with the manufacturer*

** Long permissible current loads are calculated for the following conditions: air temperature plus 25 °C, soil temperature plus 15 °C, thermal resistivity of soil 1.2 °K•m/W, laying depth in the soil 0.7 m*

*** The external diameter may differ from the rated up to ± 10 %*

© 2024 PJSC Yuzhcable Works. © 2024 A. Kevorkyan

7, Autogennaya Str., Kharkov, 61099, Ukraine. Phone: (+38-057) 728-1244, 728-1241. Fax: (+38-057) 728-1243, (+38-0572) 946-830
E-mail: market@yuzhcable.com.ua

# ПвКВнг 3х10-1
# ТУ У 31.3-00214534-016-2003

Power cables with copper conductors, XLPE-insulated, galvanized steel-wire armoured, with low-flammable PVC-compound outer sheath

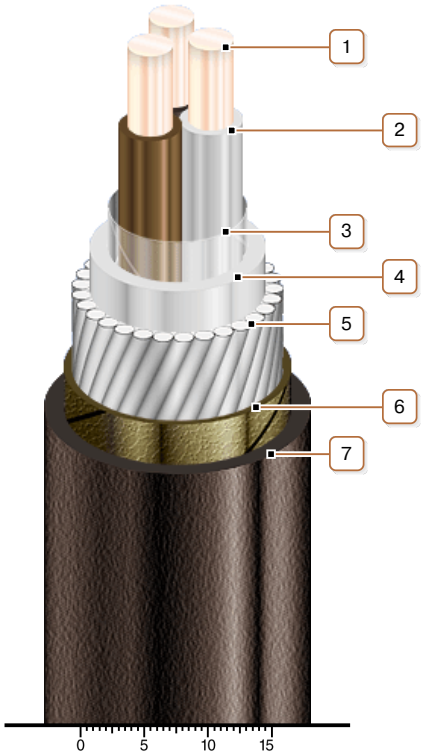


## CONSTRUCTION

*1. Copper conductor*
*2. XLPE insulation*
*3. PET film winding*
*4. PVC compound belt insulation*
*5. Round galvanized steel-wire armour*
*Note: Manufacturing of single-phase cables with aluminium-wire armour is possible*
*6. Lapping layer of nonwoven cloth tape*
*7. Low flammable PVC compound outer sheath*

*Note: Conductor twisting is not illustrated*

© 2024 PJSC Yuzhcable Works. © 2024 A. Kevorkyan