180131-130100100000

7, Autogennaya Str., Kharkov, 61099, Ukraine. Phone: (+38-057) 728-1244, 728-1241. Fax: (+38-057) 728-1243, (+38-0572) 946-830
E-mail: market@yuzhcable.com.ua

АПвВГ 3х10 (ож)-1
ТУ У 31.3-00214534-048:2007

Power cables with aluminium conductors, XLPE-insulated, with PVC-compound outer sheath

Cables are used for laying:
- *single laying*
- *in premises, dry ducts and tunnels, in corrosive environment*

Manufacturing of cable with PVC compound belt insulation is possible

Fire safety code in accordance with ДСТУ 4809:2007: ПБ100000000
Products of this mark meet the requirements:
- *single wire cable flame retardance*

TECHNICAL SPECIFICATIONS

Rated voltage	kV	1
Number and rated area of conductors	mm^2	3 x 10
Phase insulation thikness	mm	0.7
Permissible continious current rating (AC of industrial frequency) *		
• *by aerial laying*	A	58
• *by burial*	A	67
Maximum permissible conductor temperature		
• *Continious*	°C	+90
• *in emergency operation*	°C	+130
• *at short circuit*	°C	+250
Operating temperature range	°C	-50 ... +50
Minimum bending radius by laying	mm	112.5
Rated outer diameter of the cable (for reference) **	mm	15
Cable weight (approximate)	kg/km	190
Rated factory cable length and gross weight of the delivery on the drums ***	m, t	# 12: 1450 • 0.4

Notes:

When ordering it is neccesary to agree the factory length of the product with the manufacturer

** Long permissible current loads are calculated for the following conditions: air temperature plus 25 °C, soil temperature plus 15 °C, thermal resistivity of soil 1.2 °K•m/W, laying depth in the soil 0.7 m*

*** The external diameter may differ from the rated up to ± 10 %*

© 2024 PJSC Yuzhcable Works. © 2024 A. Kevorkyan

180131-130100100000

7, Autogennaya Str., Kharkov, 61099, Ukraine. Phone: (+38-057) 728-1244, 728-1241. Fax: (+38-057) 728-1243, (+38-0572) 946-830
E-mail: market@yuzhcable.com.ua

АПвВГ 3х10 (ож)-1
ТУ У 31.3-00214534-048:2007

Power cables with aluminium conductors, XLPE-insulated, with PVC-compound outer sheath

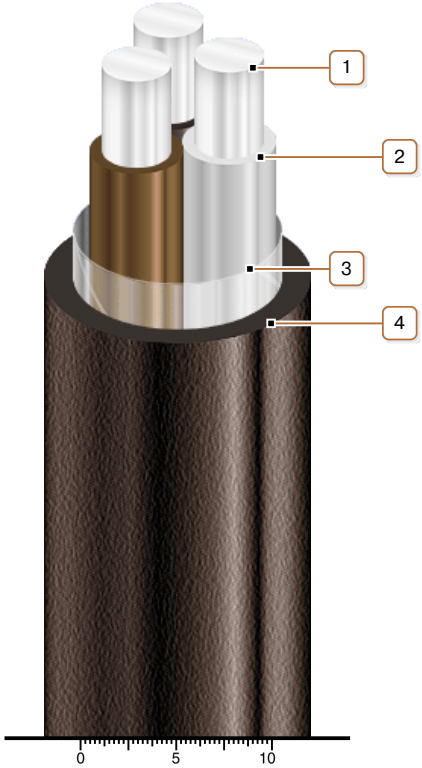

CONSTRUCTION

1. Aluminium conductor
2. XLPE insulation
3. PET film winding
4. PVC compound outer sheath

Note: Conductor twisting is not illustrated

© 2024 PJSC Yuzhcable Works. © 2024 A. Kevorkyan