180106-120100100000

7, Autogennaya Str., Kharkov, 61099, Ukraine. Phone: (+38-057) 728-1244, 728-1241. Fax: (+38-057) 728-1243, (+38-0572) 946-830
E-mail: market@yuzhcable.com.ua

ВБбШнгд 2х10-1
ТУ У 31.3-00214534-018-2003

Power cables with copper conductors, with low-flammable PVC-compound insulation, galvanized steel-tape armoured, with PVC-compound protection hose

Cables are used for laying:
- *in bunches*
- *in premises, dry ducts and tunnels, in corrosive environment*
- *in places, where small mechanical impacts on cable are possible, including tensile forces*
- *in bunches, in crowded places*

Fire safety code in accordance with ДСТУ 4809:2007: ПБ123121000
Products of this mark meet the requirements:
- *single wire cable flame retardance*
- *bunched cable flame retardance category A*
- *toxicity class Tk3 of the combustion products of nonmetallic elements (toxicity index over 120 g/m^3)*
- *class ДТк1 on smoke-forming ability by smouldering of non-metallic elements (coefficient of smoke formation from 50 to 500 m^2/kg)*
- *class ДПк2 on smoke-forming ability by combustion (minimum luminous flux more than 60 %)*
- *corrosive class Кк1 of combustion products of non-metallic elements (the number of halogen hydrides less than 150 mg/g, pH less than 4.3, specific conductivity more than 10 μS/mm)*

TECHNICAL SPECIFICATIONS

Rated voltage	kV	1
Number and rated area of conductors	mm^2	2 x 10
Phase insulation thikness	mm	1
Permissible continious current rating (AC of industrial frequency) *		
• *by aerial laying*	A	63
• *by burial*	A	79
Maximum permissible conductor temperature		
• *Continious*	˚C	+70
• *in emergency operation*	˚C	+80
• *at short circuit*	˚C	+130
Operating temperature range	˚C	-50 … +50
Minimum bending radius by laying	mm	150
Rated outer diameter of the cable (for reference) **	mm	20
Cable weight (approximate)	kg/km	710
Rated factory cable length and gross weight of the delivery on the drums ***	m, t	# 12: 820 • 0.7 # 14: 1570 • 1.3

Notes:

When ordering it is neccesary to agree the factory length of the product with the manufacturer

** Long permissible current loads are calculated for the following conditions: air temperature plus 25 ˚C, soil temperature plus 15 ˚C, thermal resistivity of soil 1.2 ˚K•m/W, laying depth in the soil 0.7 m*

*** The external diameter may differ from the rated up to ± 10 %*

© 2024 PJSC Yuzhcable Works. © 2024 A. Kevorkyan

180106-120100100000

7, Autogennaya Str., Kharkov, 61099, Ukraine. Phone: (+38-057) 728-1244, 728-1241. Fax: (+38-057) 728-1243, (+38-0572) 946-830
E-mail: market@yuzhcable.com.ua

ВБбШнгд 2х10-1
ТУ У 31.3-00214534-018-2003

Power cables with copper conductors, with low-flammable PVC-compound insulation, galvanized steel-tape armoured, with PVC-compound protection hose

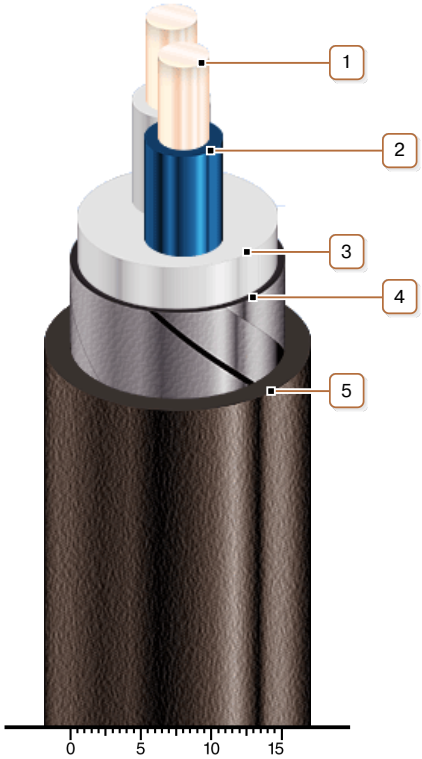

CONSTRUCTION

1. *Copper conductor*
2. *Low fire-risk PVC compound insulation*
3. *Low fire-risk PVC-compound inner sheath*
4. *Double galvanized steel-tape armour*
5. *Pressed off low fire-risk PVC compound protection hose*

Note: Conductor twisting is not illustrated

© 2024 PJSC Yuzhcable Works. © 2024 A. Kevorkyan