7, Autogennaya Str., Kharkov, 61099, Ukraine. Phone: (+38-057) 728-1244, 728-1241. Fax: (+38-057) 728-1243, (+38-0572) 946-830
E-mail: market@yuzhcable.com.ua

АПвЭгаПнг-45 1х500
ТУ У 31.3-00214534-060:2011

Power cables with aluminium conductor, flame-retardant, with XLPE, longitudinal and transverse screen sealing and polymer compound outer sheath

For the cable of this mark correspond the foreign-made analogues:
AHXCHBMK (FI)
Technical cable requirements correspond to IEC 60840

Cables are used for laying:
- *in premises, tunnels, ducts, mines, dry soil and outdoor under shelter*
- *single laying*

It is possible to manufacture cables with extruded semiconductor layer along outer sheath.
Order entry example:
АПвЭгаПнг-П–45 1х500/95 ТУ У 31.3-00214534-060:2011
An extruded semiconductor layer along outer sheath ensures the correct testing of cable line with sections of underground laying in polymer pipes.

It is possible to manufacture cables with an integrated fiber-optic module.
Order entry example:
АПвЭгаПнг-45 1х500/95 (ОМ) ТУ У 31.3-00214534-060:2011
In conjunction with the DTS system, the integrated fiber-optic module can act as a distributed cable line temperature sensor.

It is possible to manufacture cable with sealed conductor.
Order entry example:
АПвЭгаПнг-45 1х500/95 (г) ТУ У 31.3-00214534-060:2011

Fire safety code in accordance with ДСТУ 4809:2007: ПБ121122000
Products of this mark meet the requirements:
- *single wire cable flame retardance*
- *bunched cable flame retardance category A*
- *toxicity class Tk1 of the combustion products of nonmetallic elements (toxicity index from 13 up to 40 g/m^3)*
- *class ДТк1 on smoke-forming ability by smouldering of non-metallic elements (coefficient of smoke formation from 50 to 500 m^2/kg)*
- *class ДПк2 on smoke-forming ability by combustion (minimum luminous flux more than 60 %)*
- *corrosive class Кк2 of combustion products of non-metallic elements (the number of halogen hydrides less than 150 mg/g, pH more than 4.3, specific conductivity less than 10 μS/mm)*

© 2024 PJSC Yuzhcable Works. © 2024 A. Kevorkyan

110301-045000000500

7, Autogennaya Str., Kharkov, 61099, Ukraine. Phone: (+38-057) 728-1244, 728-1241. Fax: (+38-057) 728-1243, (+38-0572) 946-830
E-mail: market@yuzhcable.com.ua

АПвЭгаПнг-45 1x500
ТУ У 31.3-00214534-060:2011

Power cables with aluminium conductor, flame-retardant, with XLPE, longitudinal and transverse screen sealing and polymer compound outer sheath

TECHNICAL SPECIFICATIONS

Rated voltage	kV	45
Maximum voltage	kV	52
Conductor rated area	mm^2	500
Minimum screen cross-section	mm^2	35
Partial discharge factor for rated voltage, not more than	pC	6
Permissible short circuit current across the screen of minimum cross-section	kA	5.1
Maximum permissible short-circuit current in core	kA	47
Permissible continious current rating by aerial laying *		
• *in trefoil formation with double-side screen earthing*	A	677
• *in trefoil formation with single-side screen earthing or cross screen earthing*	A	714
• *plane with double-side screen earthing*	A	688
• *plane with single-side screen earthing or cross screen earthing*	A	843
Permissible continious current rating by burial *		
• *in trefoil formation with double-side screen earthing*	A	546
• *in trefoil formation with single-side screen earthing or cross screen earthing*	A	580
• *plane with double-side screen earthing*	A	509
• *plane with single-side screen earthing or cross screen earthing*	A	609
Maximum permissible conductor temperature		
• *Continious*	˚C	+90
• *in emergency operation*	˚C	+130
• *at short circuit*	˚C	+250
Operating temperature range	˚C	-60 … +50
Minimum bending radius by laying	mm	992
Rated outer diameter of the cable (for reference) **	mm	62
Cable weight (approximate)	kg/km	5450
Rated factory cable length and gross weight of the delivery on the drums ***	m, t	# 22УД-60: 475 • 3.5 # 25УД-90: 808 • 6.0 # 26УД-100: 1104 • 7.8

Notes:

When ordering it is neccesary to agree the factory length of the product with the manufacturer

** Long permissible current loads are calculated for the following conditions: conductor temperature 90 ˚C, air temperature 30 ˚C, soil temperature 20 ˚C, load factor 1.0, thermal resistivity of soil 1.0 ˚K•m/W, laying depth in the ground 1.5 m, while laying in flat formation the distance between cables in clear is equal to the cable diameter, while laying in trefoil formation cables are laid side by side*

*** The external diameter may differ from the rated up to ± 10 %*

**** Отклонение фактической массы брутто от указанного значения может составлять ± 7 %*

© 2024 PJSC Yuzhcable Works. © 2024 A. Kevorkyan

110301-045000000500

7, Autogennaya Str., Kharkov, 61099, Ukraine. Phone: (+38-057) 728-1244, 728-1241. Fax: (+38-057) 728-1243, (+38-0572) 946-830
E-mail: market@yuzhcable.com.ua

АПвЭгаПнг-45 1х500
ТУ У 31.3-00214534-060:2011

Power cables with aluminium conductor, flame-retardant, with XLPE, longitudinal and transverse screen sealing and polymer compound outer sheath

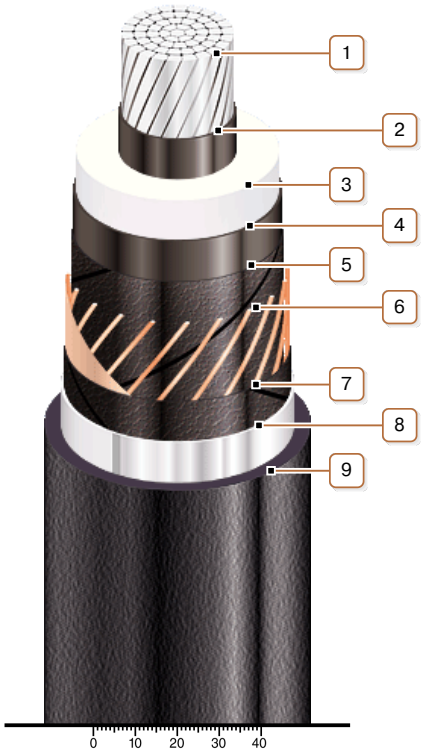

CONSTRUCTION

1. *Aluminium multiwire compacted conductor*
   Note: It is possible to manufacture cable with sealed conductor.
2. *Inner extruded semiconducting layer*
3. *XLPE insulation*
4. *Outer extruded semiconducting layer*
5. *Lapping layer of semiconductive swellable tape*
6. *Copper screen*
   Note: It is possible to manufacture a cable with a fiber optic module built into the screen, including as a DTS system sensor
7. *Lapping layer of semiconductive swellable tape*
8. *Alumopolymer tape*
9. *Flame-retardant polymer compound outer sheath*
   Note: It is possible to manufacture cable with extruded semiconductor layer along outer sheath

© 2024 PJSC Yuzhcable Works. © 2024 A. Kevorkyan