106202-200010000150

7, Autogennaya Str., Kharkov, 61099, Ukraine. Phone: (+38-057) 728-1244, 728-1241. Fax: (+38-057) 728-1243, (+38-0572) 946-830
E-mail: market@yuzhcable.com.ua

ПвЕАкВнг-20 1x150
ТУ У 31.3-00214534-017-2003

SIngle-core power cables with copper conductor, flame-retardant, with XLPE, aluminium-wire armoured, with PVC compound outer sheath

Due to non-magnetic armour, cables operate at AC
Technical cable requirements correspond to IEC 60502-2

Cables are used for laying:
- *in places, where small mechanical impacts on cable are possible, including tensile forces*
- *in premises, tunnels, ducts, mines, dry soil and outdoor under shelter*
- *in bunches*

It is possible to manufacture cables with an integrated fiber-optic module.
Order entry example:
ПвЕАкВнг-20 1x150/25 (ОМ) ТУ У 31.3-00214534-017-2003
In conjunction with the DTS system, the integrated fiber-optic module can act as a distributed cable line temperature sensor.

It is possible to manufacture cable with sealed conductor.
Order entry example:
ПвЕАкВнг-20 1x150/25 (г) ТУ У 31.3-00214534-017-2003

Fire safety code in accordance with ДСТУ 4809:2007: ПБ120000000
Products of this mark meet the requirements:
- *single wire cable flame retardance*
- *bunched cable flame retardance category A*

© 2024 PJSC Yuzhcable Works. © 2024 A. Kevorkyan

106202-200010000150

7, Autogennaya Str., Kharkov, 61099, Ukraine. Phone: (+38-057) 728-1244, 728-1241. Fax: (+38-057) 728-1243, (+38-0572) 946-830
E-mail: market@yuzhcable.com.ua

ПвЕАкВнг-20 1x150
ТУ У 31.3-00214534-017-2003

SIngle-core power cables with copper conductor, flame-retardant, with XLPE, aluminium-wire armoured, with PVC compound outer sheath

TECHNICAL SPECIFICATIONS

Rated voltage	kV	20
Maximum voltage	kV	24
Number and rated area of conductors	mm^2	1 x 150
Insulation thikness	mm	5.5
Minimum screen cross-section	mm^2	25
Permissible short circuit current across the screen of minimum cross-section	kA	5.1
Maximum permissible short-circuit current in core	kA	21.5
Permissible continious current rating *		
• *by aerial laying in trefoil formation*	A	473
• *by aerial flat laying*	A	559
• *by burial in trefoil formation*	A	361
• *by burial flat*	A	366
Partial discharge factor for rated voltage, not more than	pC	6
Maximum permissible conductor temperature		
• *Continious*	˚C	+90
• *in emergency operation*	˚C	+130
• *at short circuit*	˚C	+250
Operating temperature range (in climate version NF)	˚C	-50 ... +50
Operating temperature range (in climate version T)	˚C	-25 ... +65
Minimum bending radius by laying	mm	720
Rated outer diameter of the cable (for reference) **	mm	45
Cable weight (approximate)	kg/km	3270
Rated factory cable length and gross weight of the delivery on the drums ***	m, t	# 18аУД-40: 733 • 2.9 # 20аУД-60: 840 • 3.4 # 22УД-60: 848 • 3.7

Notes:

When ordering it is neccesary to agree the factory length of the product with the manufacturer

** Long permissible current loads are calculated for the following conditions: conductor temperature 90 ˚C, air temperature 30 ˚C, soil temperature 20 ˚C, thermal resistivity of soil 1.5 ˚K•m/W, laying depth in the soil 0.8 m, while laying in flat formation the distance between cables in clear is equal to the cable diameter, while laying in trefoil formation cables are laid side by side, shields are earthed on both ends of the line*

*** The external diameter may differ from the rated up to ± 10 %*

**** Отклонение фактической массы брутто от указанного значения может составлять ± 7 %*

© 2024 PJSC Yuzhcable Works. © 2024 A. Kevorkyan

106202-200010000150

7, Autogennaya Str., Kharkov, 61099, Ukraine. Phone: (+38-057) 728-1244, 728-1241. Fax: (+38-057) 728-1243, (+38-0572) 946-830
E-mail: market@yuzhcable.com.ua

ПвЕАкВнг-20 1х150
ТУ У 31.3-00214534-017-2003

SIngle-core power cables with copper conductor, flame-retardant, with XLPE, aluminium-wire armoured, with PVC compound outer sheath

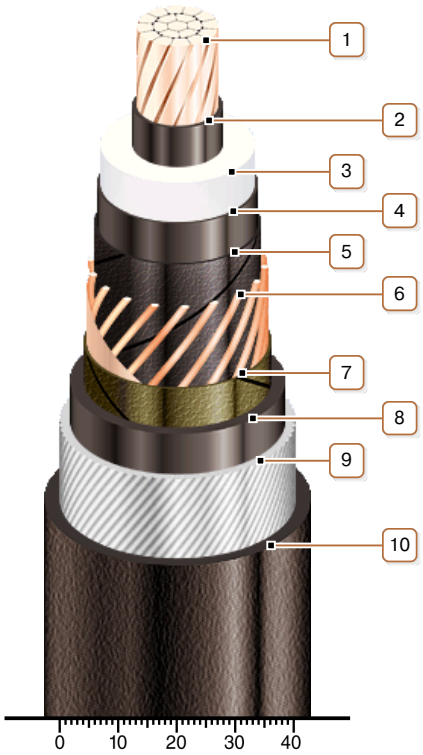

CONSTRUCTION

1. *Copper multiwire compact conductor*
   Note: It is possible to manufacture cable with sealed conductor.
2. *Inner extruded semiconducting layer*
3. *XLPE insulation*
4. *Outer extruded semiconducting layer*
5. *Lapping layer of semiconductive swellable tape*
6. *Copper screen*
7. *Lapping layer of nonwoven cloth tape*
8. *Extruded bedding of PVC compound*
9. *Aluminium-wire armour*
10. *Low flammable PVC compound outer sheath*

© 2024 PJSC Yuzhcable Works. © 2024 A. Kevorkyan