240203-120100000010

7, Autogennaya Str., Kharkov, 61099, Ukraine. Phone: (+38-057) 728-1244, 728-1241. Fax: (+38-057) 728-1243, (+38-0572) 946-830
E-mail: market@yuzhcable.com.ua

СБВБбШвнг 12х1
ТУ У 31.3-00214534-008-2001

Signal blocking cables with copper conductors, with polyethylene insulation, in low flammable PVC compound sheath, with galvanized double-steel-tape armouring, in low flammable PVC compound hose

Designed for electrical installations of railway signaling, centralization, blocking and automation at a rated voltage of 380 V AC at frequency 50 Hz or 700 V DC

Cables are used for laying:
- *in bunches*
- *in dry cable duct system, tunnels, collectors in corrosione environment*
- *in places, where small mechanical impacts on cable are possible, including tensile forces*

Fire safety code in accordance with ДСТУ 4809:2007: ПБ121000000
Products of this mark meet the requirements:
- *single wire cable flame retardance*
- *bunched cable flame retardance category A*
- *toxicity class Tk1 of the combustion products of nonmetallic elements (toxicity index from 13 up to 40 g/m^3)*

TECHNICAL SPECIFICATIONS

Rated voltage	V	380 / 700
Number and rated diameter of conductors	mm	12 x 1
Electrical resistance of the conductor at 20 °C	Ohm/km	23.3
Operating capacity, not more than	nF/km	150.0
Operating temperature range	°C	-40 ... +60
Minimum bending radius by laying	mm	192
Cable outer diameter (for reference only) **	mm	16
Cable weight (approximate)	kg/km	424
Rated factory cable length and gross weight of the delivery on the drums ***	m, t	# 12: 1280 • 0.7

Notes:

When ordering it is neccesary to agree the factory length of the product with the manufacturer

*** The external diameter may differ from the rated up to ± 10 %*

© 2024 PJSC Yuzhcable Works. © 2024 A. Kevorkyan

240203-120100000010

7, Autogennaya Str., Kharkov, 61099, Ukraine. Phone: (+38-057) 728-1244, 728-1241. Fax: (+38-057) 728-1243, (+38-0572) 946-830
E-mail: market@yuzhcable.com.ua

СБВБбШвнг 12х1
ТУ У 31.3-00214534-008-2001

Signal blocking cables with copper conductors, with polyethylene insulation, in low flammable PVC compound sheath, with galvanized double-steel-tape armouring, in low flammable PVC compound hose

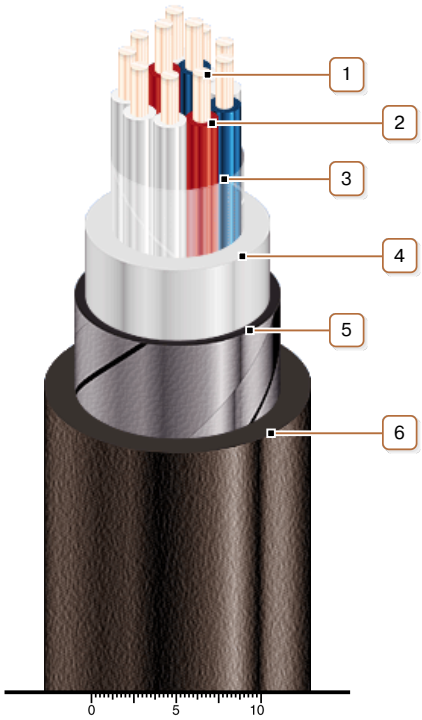

CONSTRUCTION

1. *Copper conductor*
2. *Polyethylene insulation*
3. *PET film winding*
4. *Low-flammable PVC compound inner sheath*
5. *Double galvanized steel-tape armour*
6. *Low-flammable PVC compound protection hose*

Note: Conductor twisting is not illustrated

© 2024 PJSC Yuzhcable Works. © 2024 A. Kevorkyan