220203-270000000150

7, Autogennaya Str., Kharkov, 61099, Ukraine. Phone: (+38-057) 728-1244, 728-1241. Fax: (+38-057) 728-1243, (+38-0572) 946-830
E-mail: market@yuzhcable.com.ua

# КВВГЕнгд 27х1.5
# ТУ У 31.3-00214534-018-2003

Control screened flame-retardant cables with copper conductors, low fire-risk PVC compound insulation, PVC compound sheath, low smoke and gas emission

Cables are used for laying:
- *in premises, dry ducts and tunnels, in corrosive environment*
- *with no risk of mechanical damage in operation*
- *in bunches, in crowded places*
- *with the need to protect from the effects of external electric fields*

Fire safety code in accordance with ДСТУ 4809:2007: ПБ123121000
Products of this mark meet the requirements:
- *single wire cable flame retardance*
- *bunched cable flame retardance category A*
- *toxicity class Tk3 of the combustion products of nonmetallic elements (toxicity index over 120 g/m$^3$)*
- *class ДТк1 on smoke-forming ability by smouldering of non-metallic elements (coefficient of smoke formation from 50 to 500 m$^2$/kg)*
- *class ДПк2 on smoke-forming ability by combustion (minimum luminous flux more than 60 %)*
- *corrosive class Кк1 of combustion products of non-metallic elements (the number of halogen hydrides less than 150 mg/g, pH less than 4.3, specific conductivity more than 10 μS/mm)*

## TECHNICAL SPECIFICATIONS

| | | |
|---|---|---|
| Rated voltage (AC / DC) | V | 660 / 1000 |
| Number and rated area of conductors | mm$^2$ | 27 x 1.5 |
| Minimum bending radius by laying | mm | 132 |
| Cable outer diameter (for reference only) ** | mm | 22 |
| Cable weight (approximate) | kg/km | 790 |
| Rated factory cable length and gross weight of the delivery on the drums *** | m, t | # 14: 1300 • 1.2 |

*Notes:*

*When ordering it is neccesary to agree the factory length of the product with the manufacturer*

*** The external diameter may differ from the rated up to ± 10 %*

© 2024 PJSC Yuzhcable Works. © 2024 A. Kevorkyan

220203-270000000150

7, Autogennaya Str., Kharkov, 61099, Ukraine. Phone: (+38-057) 728-1244, 728-1241. Fax: (+38-057) 728-1243, (+38-0572) 946-830
E-mail: market@yuzhcable.com.ua

# КВВГЕнгд 27х1.5
# ТУ У 31.3-00214534-018-2003

Control screened flame-retardant cables with copper conductors, low fire-risk PVC compound insulation, PVC compound sheath, low smoke and gas emission

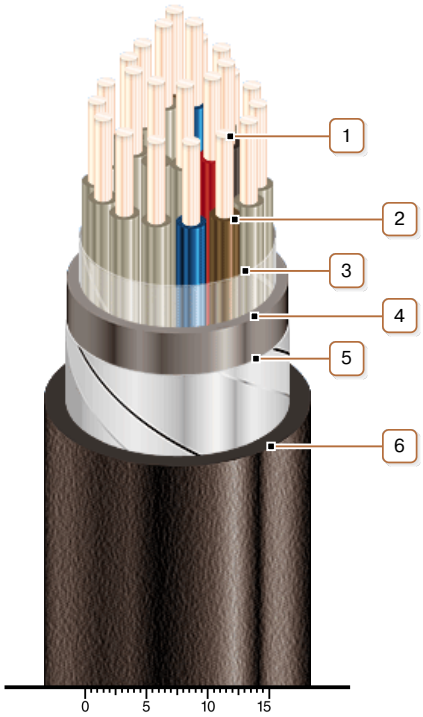


## CONSTRUCTION

1. *Copper conductor*
2. *Low fire-risk PVC compound insulation*
3. *PET film winding*
4. *Low fire-risk PVC-compound inner sheath*
5. *Aluminium foil screen*
6. *Low fire-risk PVC compound outer sheath*

*Note: Conductor twisting is not illustrated*

© 2024 PJSC Yuzhcable Works. © 2024 A. Kevorkyan