151401-012003010120

7, Autogennaya Str., Kharkov, 61099, Ukraine. Phone: (+38-057) 728-1244, 728-1241. Fax: (+38-057) 728-1243, (+38-0572) 946-830
E-mail: market@yuzhcable.com.ua

ААПл 3x120+1x70-1
ТУ У 27.3-00214534-091:2017

Power cables with aluminium conductors, with impregnated paper insulation, aluminium-sheathed, steel-wire armoured

Cables are used for laying:
- *in soil (trenches) with medium corrosiveness without vagabond currents*
- *with a risk of mechanical damage and tensile forces in operation*

TECHNICAL SPECIFICATIONS

Rated voltage	kV	1
Number and rated area of conductors	mm^2	3 x 120 + 1 x 70
Insulation thikness between conductors	mm	1.7
Insulation thikness of conductor-sheath	mm	1.45
Sheath thikness	mm	1.5
Permissible continious current rating *		
• *by aerial laying*	A	261
• *by burial*	A	248
Operating temperature range	˚C	-50 ... +50
Minimum bending radius by laying	mm	1325
Level difference along the laying rout, not more than	m	25
Metal shaeth outer diameter (for reference only)	mm	36
Rated outer diameter of the cable (for reference) **	mm	53
Cable weight (approximate)	kg/km	4880
Rated factory cable length and gross weight of the delivery on the drums ***	m, t	# 18: 400 • 2.4 # 20: 630 • 3.7

Notes:

When ordering it is neccesary to agree the factory length of the product with the manufacturer

** Long permissible current loads are calculated for the following conditions: air temperature plus 25 ˚C, soil temperature plus 15 ˚C, thermal resistivity of soil 1.2 ˚K•m/W, laying depth in the soil 0.7 m*

*** The external diameter may differ from the rated up to ± 10 %*

© 2024 PJSC Yuzhcable Works. © 2024 A. Kevorkyan

151401-012003010120

7, Autogennaya Str., Kharkov, 61099, Ukraine. Phone: (+38-057) 728-1244, 728-1241. Fax: (+38-057) 728-1243, (+38-0572) 946-830
E-mail: market@yuzhcable.com.ua

ААПл 3x120+1x70-1
ТУ У 27.3-00214534-091:2017

Power cables with aluminium conductors, with impregnated paper insulation, aluminium-sheathed, steel-wire armoured

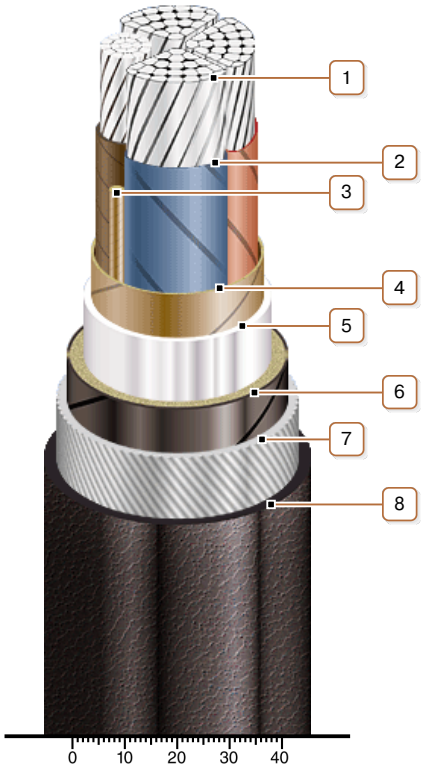

CONSTRUCTION

1. *Aluminium multiwire compacted conductor*
2. *Impregnated paper insulation*
3. *Cable paper bundle*
4. *Belt insulation*
5. *Aluminium sheath*
6. *Single-layer plastic-tape bedding*
7. *Round galvanized steel-wire armour*
8. *Outer covering*

Note: Conductor twisting is not illustrated

© 2024 PJSC Yuzhcable Works. © 2024 A. Kevorkyan