110702-110000000800

7, Autogennaya Str., Kharkov, 61099, Ukraine. Phone: (+38-057) 728-1244, 728-1241. Fax: (+38-057) 728-1243, (+38-0572) 946-830
E-mail: market@yuzhcable.com.ua

АПвСПнг-110 1x800
ТУ У 31.3-00214534-060:2011

Power cables with aluminium conductor, XLPE-insulated, lead-sheathed, with outer sheath of polymer composition, flame retardant

Technical cable requirements correspond to IEC 60840

Cables are used for laying:
- *in places, where small mechanical impacts on cable are possible, including tensile forces*
- *in premises, tunnels, ducts, mines, dry soil and outdoor under shelter*
- *single laying*

It is possible to manufacture cables with extruded semiconductor layer along outer sheath.
Order entry example:
АПвСПнг-П–110 1x800/95 ТУ У 31.3-00214534-060:2011
An extruded semiconductor layer along outer sheath ensures the correct testing of cable line with sections of underground laying in polymer pipes.

It is possible to manufacture cables with an integrated fiber-optic module.
Order entry example:
АПвСПнг-110 1x800/95 (ОМ) ТУ У 31.3-00214534-060:2011
In conjunction with the DTS system, the integrated fiber-optic module can act as a distributed cable line temperature sensor.

It is possible to manufacture cable with sealed conductor.
Order entry example:
АПвСПнг-110 1x800/95 (г) ТУ У 31.3-00214534-060:2011

Fire safety code in accordance with ДСТУ 4809:2007: ПБ101122000
Products of this mark meet the requirements:
- *single wire cable flame retardance*
- *toxicity class Тк1 of the combustion products of nonmetallic elements (toxicity index from 13 up to 40 g/m^3)*
- *class ДТк1 on smoke-forming ability by smouldering of non-metallic elements (coefficient of smoke formation from 50 to 500 m^2/kg)*
- *class ДПк2 on smoke-forming ability by combustion (minimum luminous flux more than 60 %)*
- *corrosive class Кк2 of combustion products of non-metallic elements (the number of halogen hydrides less than 150 mg/g, pH more than 4.3, specific conductivity less than 10 µS/mm)*

© 2024 PJSC Yuzhcable Works. © 2024 A. Kevorkyan

110702-110000000800

7, Autogennaya Str., Kharkov, 61099, Ukraine. Phone: (+38-057) 728-1244, 728-1241. Fax: (+38-057) 728-1243, (+38-0572) 946-830
E-mail: market@yuzhcable.com.ua

АПвСПнг-110 1x800
ТУ У 31.3-00214534-060:2011

Power cables with aluminium conductor, XLPE-insulated, lead-sheathed, with outer sheath of polymer composition, flame retardant

TECHNICAL SPECIFICATIONS

Rated voltage	kV	110
Maximum voltage	kV	126
Conductor rated area	mm^2	800
Sheath thikness	mm	2.9
Partial discharge factor for rated voltage, not more than	pC	6
Permissible short circuit current across the screen	kA	17.90
Maximum permissible short-circuit current in core	kA	75.2
Permissible continious current rating by aerial laying *		
• *in trefoil formation with double-side screen earthing*	A	905
• *in trefoil formation with single-side screen earthing or cross screen earthing*	A	970
• *plane with double-side screen earthing*	A	873
• *plane with single-side screen earthing or cross screen earthing*	A	1126
Permissible continious current rating by burial *		
• *in trefoil formation with double-side screen earthing*	A	694
• *in trefoil formation with single-side screen earthing or cross screen earthing*	A	757
• *plane with double-side screen earthing*	A	623
• *plane with single-side screen earthing or cross screen earthing*	A	799
Maximum permissible conductor temperature		
• *Continious*	˚C	+90
• *in emergency operation*	˚C	+130
• *at short circuit*	˚C	+250
Operating temperature range	˚C	-60 … +50
Minimum bending radius by laying	mm	2150
Rated outer diameter of the cable (for reference) **	mm	86
Cable weight (approximate)	kg/km	15810
Rated factory cable length and gross weight of the delivery on the drums ***	m, t	# 25УД-90: 420 • 8.2 # 26УД-100: **** 517 • 10.0

Notes:

When ordering it is neccesary to agree the factory length of the product with the manufacturer

** Long permissible current loads are calculated for the following conditions: conductor temperature 90 ˚C, air temperature 30 ˚C, soil temperature 20 ˚C, load factor 1.0, thermal resistivity of soil 1.0 ˚K•m/W, laying depth in the ground 1.5 m, while laying in flat formation the distance between cables in clear is equal to the cable diameter, while laying in trefoil formation cables are laid side by side*

*** The external diameter may differ from the rated up to ± 10 %*

**** Отклонение фактической массы брутто от указанного значения может составлять ± 7 %*

***** Option delivery on not full drum*

© 2024 PJSC Yuzhcable Works. © 2024 A. Kevorkyan

110702-110000000800

7, Autogennaya Str., Kharkov, 61099, Ukraine. Phone: (+38-057) 728-1244, 728-1241. Fax: (+38-057) 728-1243, (+38-0572) 946-830
E-mail: market@yuzhcable.com.ua

АПвСПнг-110 1х800
ТУ У 31.3-00214534-060:2011

Power cables with aluminium conductor, XLPE-insulated, lead-sheathed, with outer sheath of polymer composition, flame retardant

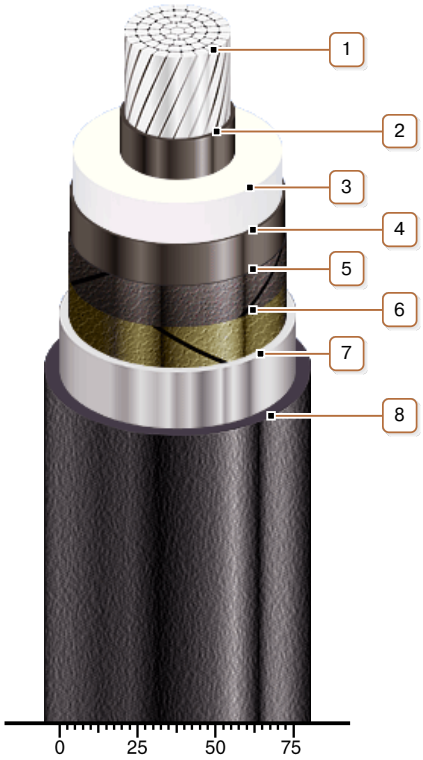

CONSTRUCTION

1. Aluminium multiwire compacted conductor
Note: It is possible to manufacture cable with sealed conductor.

2. Inner extruded semiconducting layer

3. XLPE insulation

4. Outer extruded semiconducting layer

5. Lapping layer of semiconductive swellable tape

6. Lapping layer of semiconductive tape

7. Lead sheath

8. Flame-retardant polymer compound outer sheath
Note: It is possible to manufacture cable with extruded semiconductor layer along outer sheath

© 2024 PJSC Yuzhcable Works. © 2024 A. Kevorkyan