105701-100030000150

7, Autogennaya Str., Kharkov, 61099, Ukraine. Phone: (+38-057) 728-1244, 728-1241. Fax: (+38-057) 728-1243, (+38-0572) 946-830
E-mail: market@yuzhcable.com.ua

ПвЕогаПнг-10 3х150
ТУ У 31.3-00214534-017-2003

Three-core power cables with copper conductors, flame-retardant, with XLPE, collective screen, with longitudinal and transverse sealing and polymer compound outer sheath

Technical cable requirements correspond to IEC 60502-2

Cables are used for laying:
- *in premises, tunnels, ducts, mines, dry soil and outdoor under shelter*
- *single laying*

It is possible to manufacture cables with extruded semiconductor layer along outer sheath.
Order entry example:
ПвЕогаПнг-П–10 3х150/50 ТУ У 31.3-00214534-017-2003
An extruded semiconductor layer along outer sheath ensures the correct testing of cable line with sections of underground laying in polymer pipes.

It is possible to manufacture cables with an integrated fiber-optic module.
Order entry example:
ПвЕогаПнг-10 3х150/50 (ОМ) ТУ У 31.3-00214534-017-2003
In conjunction with the DTS system, the integrated fiber-optic module can act as a distributed cable line temperature sensor.

It is possible to manufacture cable with sealed conductors.
Order entry example:
ПвЕогаПнг-10 3х150/50 (г) ТУ У 31.3-00214534-017-2003

It is possible manufacturing of cables in versions (A) and (B), flame-retardant when laying in bunches

Fire safety code in accordance with ДСТУ 4809:2007: ПБ101122000
Products of this mark meet the requirements:
- *single wire cable flame retardance*
- *toxicity class Tk1 of the combustion products of nonmetallic elements (toxicity index from 13 up to 40 g/m^3)*
- *class ДТк1 on smoke-forming ability by smouldering of non-metallic elements (coefficient of smoke formation from 50 to 500 m^2/kg)*
- *class ДПк2 on smoke-forming ability by combustion (minimum luminous flux more than 60 %)*
- *corrosive class Кк2 of combustion products of non-metallic elements (the number of halogen hydrides less than 150 mg/g, pH more than 4.3, specific conductivity less than 10 µS/mm)*

© 2024 PJSC Yuzhcable Works. © 2024 A. Kevorkyan

105701-100030000150

7, Autogennaya Str., Kharkov, 61099, Ukraine. Phone: (+38-057) 728-1244, 728-1241. Fax: (+38-057) 728-1243, (+38-0572) 946-830
E-mail: market@yuzhcable.com.ua

ПвЕогаПнг-10 3х150
ТУ У 31.3-00214534-017-2003

Three-core power cables with copper conductors, flame-retardant, with XLPE, collective screen, with longitudinal and transverse sealing and polymer compound outer sheath

TECHNICAL SPECIFICATIONS

Rated voltage	kV	10
Maximum voltage	kV	12
Number and rated area of conductors	mm^2	3 x 150
Insulation thikness	mm	3.4
Minimum screen cross-section	mm^2	50
Permissible short circuit current across the screen of minimum cross-section	kA	10.2
Maximum permissible short-circuit current in core	kA	21.5
Permissible continious current rating *		
• *by aerial laying*	A	398
• *by burial*	A	334
Partial discharge factor for rated voltage, not more than	pC	6
Maximum permissible conductor temperature		
• *Continious*	° C	+90
• *in emergency operation*	° C	+130
• *at short circuit*	° C	+250
Operating temperature range	° C	-60 … +50
Minimum bending radius by laying	mm	1120
Rated outer diameter of the cable (for reference) **	mm	70
Cable weight (approximate)	kg/km	7800
Rated factory cable length and gross weight of the delivery on the drums ***	m, t	# 22УД-60: 339 • 3.6 # 25УД-90: 611 • 6.3

Notes:

When ordering it is neccesary to agree the factory length of the product with the manufacturer

** Long permissible current loads are calculated for the following conditions: conductor temperature 90 °C, air temperature 30 °C, soil temperature 20 °C, load factor 1.0, thermal resistivity of soil 1.5 °K•m/W, laying depth in the ground 0.8 m, shields are grounded at both ends of the line*

*** The external diameter may differ from the rated up to ± 10 %*

**** Отклонение фактической массы брутто от указанного значения может составлять ± 7 %*

© 2024 PJSC Yuzhcable Works. © 2024 A. Kevorkyan

105701-100030000150

7, Autogennaya Str., Kharkov, 61099, Ukraine. Phone: (+38-057) 728-1244, 728-1241. Fax: (+38-057) 728-1243, (+38-0572) 946-830
E-mail: market@yuzhcable.com.ua

ПвЕогаПнг-10 3х150
ТУ У 31.3-00214534-017-2003

Three-core power cables with copper conductors, flame-retardant, with XLPE, collective screen, with longitudinal and transverse sealing and polymer compound outer sheath

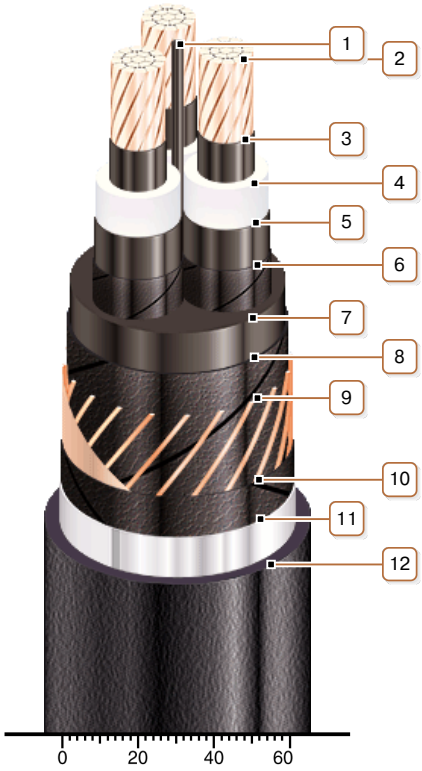

CONSTRUCTION

1. *Central polyethylene bundle*
2. *Copper multiwire compact conductor*
   Note: It is possible to manufacture cable with sealed conductors.
3. *Inner extruded semiconducting layer*
4. *XLPE insulation*
5. *Outer extruded semiconducting layer*
6. *Lapping layer of semiconductive swellable tape*
7. *Extruded filling of semiconducting polyethylene*
8. *Lapping layer of semiconductive swellable tape*
9. *Copper screen*
10. *Lapping layer of semiconductive swellable tape*
11. *Alumopolymer tape*
12. *Flame-retardant polymer compound outer sheath*
    Note: It is possible to manufacture cable with extruded semiconductor layer along outer sheath

Note: Conductor twisting is not illustrated

© 2024 PJSC Yuzhcable Works. © 2024 A. Kevorkyan